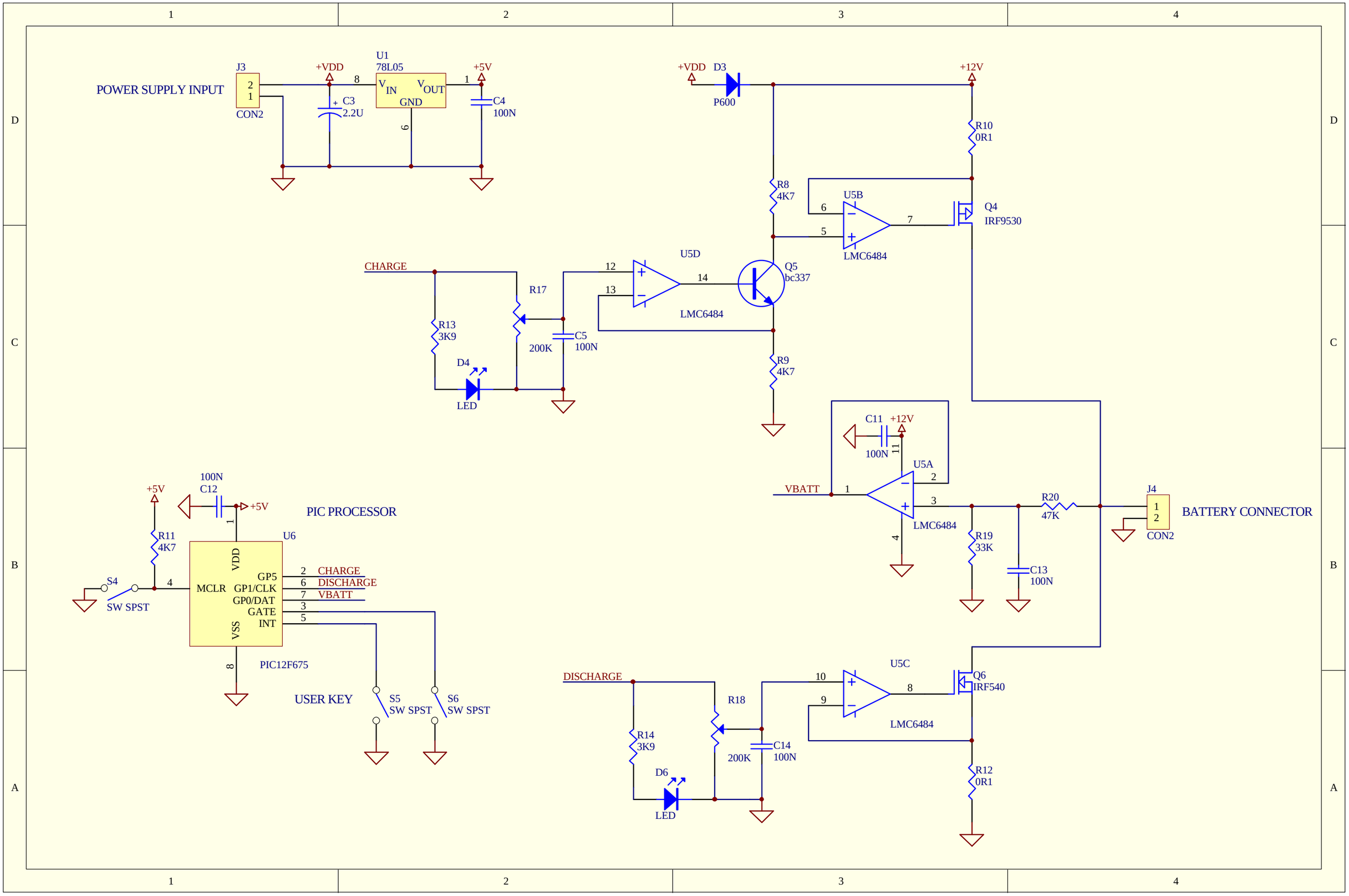
POWER SUPPLY INPUT
J3
CON2
+VDD
U1
78L05
VIN
VOUT
GND
+5V
C3
2.2U
C4
100N
+VDD
D3
P600
+12V
R10
0R1
R8
4K7
U5B
LMC6484
Q4
IRF9530
CHARGE
R17
200K
R13
3K9
D4
LED
C5
100N
U5D
LMC6484
Q5
bc337
R9
4K7
C11
100N
+12V
U5A
LMC6484
VBATT
R20
47K
J4
CON2
BATTERY CONNECTOR
R19
33K
C13
100N
+5V
100N
C12
+5V
PIC PROCESSOR
U6
R11
4K7
S4
SW SPST
MCLR
VDD
VSS
GP5
GP1/CLK
GP0/DAT
GATE
INT
CHARGE
DISCHARGE
VBATT
PIC12F675
USER KEY
S5
SW SPST
S6
SW SPST
DISCHARGE
R18
200K
R14
3K9
D6
LED
C14
100N
U5C
LMC6484
Q6
IRF540
R12
0R1